RCA-6146A
BEAM POWER TUBE

Controlled Zero-Bias Plate Current
Controlled Power Output at Reduced Heater Voltage

90 Watts CW Input (ICAS) up to 60 Mc
60 Watts CW Input (ICAS) at 175 Mc
Sturdy Structure
RCA "Dark Heater"

3-13/16" Max. Length
1-21/32" Max. Diameter
Octal 8-Pin Base
Small Size

RCA-6146A is a small, sturdy, beam power tube having high efficiency and high power sensitivity. It is designed for use as an rf power amplifier and oscillator as well as an af power amplifier and modulator in both mobile and fixed equipment. The 6146A has a maximum plate dissipation of 25 watts under ICAS conditions in modulator service and in cw service. In the latter service, it can be operated with full input to 60 Mc and with reduced input to 175 Mc.

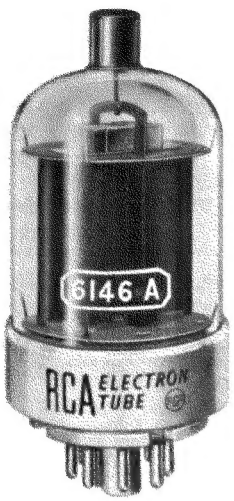

Because of its high power sensitivity and high efficiency, the 6146A can be operated with relatively low plate voltage to give large power output with small driving power.

The 6146A features more dependable performance with battery power supplies because it is designed to deliver not less than 90% of useful power output when the heater voltage is reduced to 5 volts. See Test No. 8 of Characteristics Range Values.

Controlled zero-bias plate current is offered in the 6146A to insure more dependable performance as a Class AB_1 linear rf amplifier for single-sideband suppressed-carrier service. See Test No. 4 of Characteristics Range Values.

Also featured in the design of the 6146A is the new RCA "Dark Heater", which functions efficiently at operating temperatures 350° K below those of the heaters in conventional tube types. The dark surface of the new heater radiates heat more efficiently and improves the transfer of heat to the cathode so that optimum cathode temperature may be attained with the heater operating at approximately 1350° K.

The low operating temperature of the "Dark Heater" results in (1) lower internal stresses in the heater wire and smaller thermal change during heater warmup, (2) cooler operation of the heater which minimizes changes in heater shape and reduces the possibility of heater damage and heater shorts, (3) extremely stable heater current characteristics throughout life, and (4) significant reduction in effects of ac heater leakage.

Small in size for its power-output capability, the 6146A has a rugged button-stem construction with short internal leads, a T12 bulb, triple base-pin connections for grid No. 3 and cathode (both joined to internal shield inside the tube) to permit effective rf grounding, and an octal base with short metal sleeve having its own base-pin terminal. The sleeve shields the input to the tube and isolates it from the output circuit so completely that no other external shielding is required. Separation of input and output circuits is accomplished by bringing the plate lead out of the bulb to a cap opposite the base.

The 6146A is unilaterally interchangeable with the 6146.

GENERAL DATA

Electrical:

Heater, for Unipotential Cathode:		
Voltage (AC or DC)[a]	6.3	volts
Current at 6.3 volts	1.25	amp
Minimum heating time	60	sec
Transconductance, for plate volts = 200, grid-No. 2 volts = 200, and plate ma. = 100	7000	μmhos
Mu-Factor, Grid No. 2 to Grid No. 1 for plate volts = 200, grid-No. 2 volts = 200, and plate ma. = 100.	4.5	
Direct Interelectrode Capacitances (Approx.):[b]		
Grid No. 1 to plate	0.24 max.	pf
Grid No. 1 to cathode & grid No. 3 & internal shield, base sleeve, grid No. 2, and heater	13	pf
Plate to cathode & grid No. 3 & internal shield, base sleeve, grid No. 2, and heater	8.5	pf

Mechanical:

Operating Position	Any
Maximum Overall Length	3-13/16"

RADIO CORPORATION OF AMERICA
Electron Tube Division Harrison, N. J.

Trademark(s) ® Registered
Marca(s) Registrada(s)

6146A 5-63
Printed in U.S.A.

Seated Length	3-1/8" ± 1/8"
Maximum Diameter	1-21/32"
Bulb	T12
Cap	Small (JEDEC No. C1-1)
Base	Large-Wafer Octal 8-Pin with Sleeve (JEDEC Group 1, No. B8-86), Large-Wafer Octal 8-Pin with External Barriers and Sleeve (JEDEC Group 1, No. B8-98), Small-Wafer Octal 8-Pin with Sleeve (JEDEC Group 1, No. B8-150), or Small-Wafer Octal 8-Pin with External Barriers and Sleeve (JEDEC Group 1, No. B8-159)
Bulb Temperature (At hottest point)	220 max. °C
Weight (Approx.)	2.3 oz

AF POWER AMPLIFIER & MODULATOR—Class AB_1

Maximum Ratings, *Absolute-Maximum Values:*

	CCS	*ICAS*	
DC PLATE VOLTAGE	600 max.	750 max.	volts
DC GRID-No. 2 VOLTAGE	250 max.	250 max.	volts
MAX.-SIGNAL DC PLATE CURRENT[c]	125 max.	135 max.	ma
MAX.-SIGNAL PLATE INPUT[c]	60 max.	85 max.	watts
MAX.-SIGNAL GRID-No. 2 INPUT[c]	3 max.	3 max.	watts
PLATE DISSIPATION[c]	20 max.	25 max.	watts
PEAK HEATER-CATHODE VOLTAGE:			
Heater negative with respect to cathode.	135 max.	135 max.	volts
Heater positive with respect to cathode.	135 max.	135 max.	volts

Typical CCS Operation:

Values are for 2 tubes

DC Plate Voltage	400	500	600	volts
DC Grid-No. 2 Voltage[d]	190	185	180	volts
DC Grid-No. 1 Voltage:				
With fixed-bias source.	-40	-40	-45	volts
Peak AF Grid-No. 1-to-Grid-No. 1 Voltage[e]	80	80	90	volts
Zero-Signal DC Plate Current	63	57	26	ma
Max.-Signal DC Plate Current	228	215	200	ma
Zero-Signal DC Grid-No. 2 Current	2.5	2	1	ma
Max.-Signal DC Grid-No. 2 Current	25	25	23	ma
Effective Load Resistance (Plate to plate)	4000	5500	7000	ohms
Max.-Signal Driving Power (Approx.)	0	0	0	watts
Max.-Signal Power Output (Approx.)	55	70	82	watts

Typical ICAS Operation:

Values are for 2 tubes

DC Plate Voltage	600	750	volts
DC Grid-No. 2 Voltage[d]	200	195	volts
DC Grid-No. 1 Voltage:			
From fixed-bias source.	-50	-50	volts
Peak AF Grid-No. 1-to-Grid-No. 1 Voltage[e]	100	100	volts
Zero-Signal DC Plate Current	28	23	ma
Max.-Signal DC Plate Current	229	220	ma
Zero-Signal DC Grid-No. 2 Current	1	1	ma
Max.-Signal DC Grid-No. 2 Current	27	26	ma
Effective Load Resistance (Plate to plate)	6000	8000	ohms
Max.-Signal Driving Power (Approx.)	0	0	watts
Max.-Signal Power Output (Approx.)	95	120	watts

Maximum Circuit Values (CCS or ICAS):

Grid-No. 1-Circuit Resistance under Any Condition:[f]	
With fixed bias	0.1 max. megohm
With cathode bias	Not recommended

AF POWER AMPLIFIER & MODULATOR—Class AB_2

Maximum Ratings, *Absolute-Maximum Values:*

	CCS	*ICAS*	
DC PLATE VOLTAGE	600 max.	750 max.	volts
DC GRID-No. 2 VOLTAGE	250 max.	250 max.	volts
MAX.-SIGNAL DC PLATE CURRENT[c]	125 max.	135 max.	ma
MAX.-SIGNAL PLATE INPUT[c]	62.5 max.	90 max.	watts
MAX.-SIGNAL GRID-No. 2 INPUT[c]	3 max.	3 max.	watts
PLATE DISSIPATION[c]	20 max.	25 max.	watts
PEAK HEATER-CATHODE VOLTAGE:			
Heater negative with respect to cathode.	135 max.	135 max.	volts
Heater positive with respect to cathode.	135 max.	135 max.	volts

Typical CCS Operation:

Values are for 2 tubes

DC Plate Voltage	400	500	600	volts
DC Grid-No. 2 Voltage[d]	175	175	165	volts
DC Grid-No. 1 Voltage:				
From fixed-bias source.	-41	-44	-44	volts
Peak AF Grid-No. 1-to-Grid-No. 1 Voltage	95	102	97	volts
Zero-Signal DC Plate Current	33	27	22	ma
Max.-Signal DC Plate Current	232	242	207	ma
Zero-Signal DC Grid-No. 2 Current	1.1	0.7	0.6	ma
Max.-Signal DC Grid-No. 2 Current	18	18	17	ma
Max.-Signal DC Grid-No. 1 Current	1.6	1.9	1.1	ma
Effective Load Resistance (Plate to plate)	3700	4600	6800	ohms
Max.-Signal Driving Power (Approx.)[g]	0.2	0.3	0.2	watt
Max.-Signal Power Output (Approx.)	62	83	90	watts

Typical ICAS Operation:

Values are for 2 tubes

DC Plate Voltage	600	750	volts
DC Grid-No. 2 Voltage[d]	190	165	volts
DC Grid-No. 1 Voltage:			
From fixed-bias source.	-48	-46	volts
Peak AF Grid-No. 1-to-Grid-No. 1 Voltage	109	108	volts
Zero-Signal DC Plate Current	28	22	ma
Max.-Signal DC Plate Current	270	240	ma
Zero-Signal DC Grid-No. 2 Current	1.2	0.3	ma
Max.-Signal DC Grid-No. 2 Current	20	20	ma

Max.-Signal DC Grid-No.1 Current.	2	2.6	ma
Effective Load Resistance (Plate to plate).	5000	7400	ohms
Max.-Signal Driving Power (Approx.)[g].	0.3	0.4	watt
Max.-Signal Power Output (Approx.)	113	131	watts

Maximum Circuit Values (CCS or ICAS):

Grid-No. 1-Circuit Resistance:[h]
With fixed bias . . . . . 30,000 max. ohms
With cathode bias . . . . . Not recommended

LINEAR RF POWER AMPLIFIER—Class AB$_1$ Single-Sideband Suppressed-Carrier Service

Maximum Ratings, *Absolute-Maximum Values up to 60 Mc:*

	CCS	ICAS	
DC PLATE VOLTAGE. . . .	600 max.	750 max.	volts
DC GRID-No. 2 VOLTAGE. .	250 max.	250 max.	volts
MAX.-SIGNAL DC PLATE CURRENT. . .	125 max.	135 max.	ma
MAX.-SIGNAL PLATE INPUT.	60 max.	85 max.	watts
MAX.-SIGNAL GRID-No. 2 INPUT . . .	3 max.	3 max.	watts
PLATE DISSIPATION . . .	20 max.	25 max.	watts
PEAK HEATER-CATHODE VOLTAGE:			
Heater negative with respect to cathode.	135 max.	135 max.	volts
Heater positive with respect to cathode.	135 max.	135 max.	volts

Typical Operation:

At 60 Mc with "Single-Tone" Modulation

	CCS		ICAS		
DC Plate Voltage. . . .	400	600	600	750	volts
DC Grid-No. 2 Voltage[j] .	190	180	200	195	volts
DC Grid-No. 1 Voltage[k] .	-40	-45	-50	-50	volts
Zero-Signal DC Plate Current	32	13	14	12	ma
Effective RF Load Resistance.	2000	3500	3000	4000	ohms
Max.-Signal DC Plate Current	114	100	115	110	ma
Max.-Signal DC Grid-No. 2 Current . .	12	11	14	13	ma
Max.-Signal Peak RF Grid-No. 1 Voltage . .	40	45	50	50	volts
Max.-Signal Driving Power (Approx.)	0	0	0	0	watts
Max.-Signal Power Output (Approx.). . .	27	41	48	60	watts

Maximum Circuit Values:

Grid-No. 1-Circuit Resistance:[f]
With fixed bias . . . . . 30,000 max. ohms
With cathode bias . . . . . Not recommended

PLATE-MODULATED RF POWER AMPLIFIER—Class C Telephony

Carrier conditions per tube for use with a max. modulation factor of 1.0; at frequencies up to 60 Mc

	CCS	ICAS	
Maximum Ratings, *Absolute-Maximum Values:*			
DC PLATE VOLTAGE. .	480 max.	600 max.	volts
DC GRID-No.2 VOLTAGE .	250 max.	250 max.	volts
DC GRID-No.1 VOLTAGE .	-150 max.	-150 max.	volts
DC PLATE CURRENT. . .	117 max.	125 max.	ma
DC GRID-No.1 CURRENT .	3.5 max.	4.0 max.	ma
PLATE INPUT	45 max.	67.5 max.	watts
GRID-No. 2 INPUT . . .	2 max.	2 max.	watts
PLATE DISSIPATION . .	13.3 max.	16.7 max.	watts
PEAK HEATER-CATHODE VOLTAGE:			
Heater negative with respect to cathode. . . .	135 max.	135 max.	volts
Heater positive with respect to cathode. . . .	135 max.	135 max.	volts

Typical Operation:

DC Plate Voltage. .	400	475	600	volts
DC Grid-No. 2 Voltage[m].	150	135	150	volts
From a series resistor of . . .	33,000	51,000	56,000	ohms
DC Grid-No. 1 Voltage[n].	-87	-77	-87	volts
From a grid resistor of . . .	27,000	27,000	27,000	ohms
Peak RF Grid-No. 1 Voltage	107	95	107	volts
DC Plate Current. .	112	94	112	ma
DC Grid-No.2 Current	7.8	6.4	7.8	ma
DC Grid-No.1 Current (Approx.)	3.4	2.8	3.4	ma
Driving Power (Approx.)	0.4	0.3	0.4	watt
Power Output (Approx.)	32	34	52	watts

Maximum Circuit Values (CCS or ICAS):

Grid-No. 1-Circuit Resistance[p] . . 30,000 max. ohms

RF POWER AMPLIFIER & OSC.—Class C Telegraphy and RF POWER AMPLIFIER—Class C FM Telephony

	CCS	ICAS	
Maximum Ratings, *Absolute-Maximum Values up to 60 Mc:*			
DC PLATE VOLTAGE. . .	600 max.	750 max.	volts
DC GRID-No. 2 VOLTAGE.	250 max.	250 max.	volts
DC GRID-No. 1 VOLTAGE.	-150 max.	-150 max.	volts
DC PLATE CURRENT. . .	140 max.	150 max.	ma
DC GRID-No. 1 CURRENT.	3.5 max.	4.0 max.	ma
PLATE INPUT	67.5 max.	90 max.	watts
GRID-No. 2 INPUT . . .	3 max.	3 max.	watts
PLATE DISSIPATION . .	20 max.	25 max.	watts
PEAK HEATER-CATHODE VOLTAGE:			
Heater negative with respect to cathode. . . .	135 max.	135 max.	volts
Heater positive with respect to cathode. . . .	135 max.	135 max.	volts

Typical Operation as Amplifier up to 60 Mc:

DC Plate Voltage. . .	500	600	600	750	volts
DC Grid-No.2 Voltage[q].	170	150	180	160	volts
From a series resistor of	36,000	51,000	43,000	56,000	ohms
DC Grid-No.1 Voltage[r].	-66	-58	-71	-62	volts
From a grid-No. 1 resistor of . . .	27,000	20,000	24,000	20,000	ohms
From a cathode resistor of . . .	470	470	430	470	ohms

Peak RF Grid-No.1 Voltage	84	73	91	79	volts
DC Plate Current	135	112	150	120	ma
DC Grid-No.2 Current	9	9	10	11	ma
DC Grid-No.1 Current (Approx.)	2.5	2.8	2.8	3.1	ma
Driving Power (Approx.)	0.2	0.2	0.3	0.2	watt
Power Output (Approx.)	48	52	66	70	watts

Typical Operation as Amplifier at 175 Mc:

DC Plate Voltage	320	400	volts
DC Grid-No.2 Voltage[q]	180	190	volts
From a series resistor of	13,000	20,000	ohms
DC Grid-No.1 Voltage[r]	-51	-54	volts
From a grid resistor of	27,000	24,000	ohms
From a cathode resistor of	330	330	ohms
Peak RF Grid-No.1 Voltage	64	68	volts
DC Plate Current	140	150	ma
DC Grid-No.2 Current	10	10.4	ma
DC Grid-No.1 Current (Approx.)	2	2.2	ma
Driving Power (Approx.)	3	3	watts
Power Output (Approx.)	25	35	watts

Maximum Circuit Values (CCS or ICAS):

Grid-No.1-Circuit Resistance[p] . . 30,000 max. ohms

MAXIMUM RATINGS vs. OPERATING FREQUENCY

OPERATING FREQUENCY Megacycles per second	MAXIMUM PERMISSIBLE PERCENTAGE OF MAXIMUM RATED PLATE VOLTAGE & PLATE INPUT			
	TELEPHONY		TELEGRAPHY	
	Class C Plate-Modulated		Class C Unmodulated	
	Voltage	*Input*	*Voltage*	*Input*
60	100	100	100	100
80	84	92	84	92
125	65	78	65	78
150	58	72	58	72
160	56	70	56	70
175	53	67	53	67

CHARACTERISTICS RANGE VALUES

	Note	*Min.*	*Max.*	
1. Heater Current	1	1.175	1.325	amp
2. Direct Interelectrode Capacitances:				
Grid No.1 to plate	2	-	0.24	pf
Grid No.1 to cathode & grid No.3 & internal shield, base sleeve, grid No.2, and heater	2	12.0	15.0	pf
Plate to cathode & grid No.3 & internal shield, base sleeve, grid No.2, and heater	2	7.3	9.5	pf
3. Plate Current	1,3	46	94	ma
4. Zero-Bias Plate Current	1,4	330	-	ma
5. Grid-No.2 Current	1,3	-	5.5	ma
6. Dynamic Grid-No.2 Current	1,5	3	21	ma
7. Useful Power Output I	1,5	47	-	watts
8. Useful Power Output II	6		(See Note 6)	

Note 1: With 6.3 volts ac on heater.

Note 2: With no external shield.

Note 3: With dc plate voltage of 300 volts, dc grid-No.2 voltage of 200 volts, and dc grid-No.1 voltage of -33 volts.

Note 4: With dc plate voltage of 100 volts, dc grid-No.2 voltage of 200 volts, and dc grid-No.1 voltage of -100 volts. Grid No.1 is square-wave pulsed at 1000 kc to zero volts. Limit value is peak-pulse current.

Note 5: In a single-tube, self-excited oscillator circuit, and with dc plate voltage of 600 volts, dc grid-No.2 voltage of 180 volts, grid-No.1 resistor of 30000 ± 10% ohms, dc plate current of 112 max. ma., dc grid-No.1 current of 2 to 2.5 ma., and frequency of 15 Mc.

Note 6: With conditions in test No.7, reduce heater voltage to 5 volts. Useful power output shall be at least 90% of that at heater voltage of 6.3 volts.

---

[a] Heater voltage fluctuations will cause variations in power output. See Test No.8 of Characteristics Range Values.

[b] With no external shield.

[c] Averaged over any audio-frequency cycle or sine-wave form.

[d] Obtained preferably from a separate source or from the plate voltage supply with a voltage divider.

[e] The driver stage should be capable of supplying the No.1 grids of the class AB_1 stage with the specified driving voltage at low distortion.

[f] The type of input coupling network used should not introduce too much resistance in the grid-No.1 circuit. Transformer or impedance coupling devices are recommended.

[g] Driver stage should be capable of supplying the specified driving power at low distortion to the No.1 grids of the AB_2 stage.

[h] To minimize distortion, the effective resistance per grid-No.1 circuit of the AB_2 stage should be held at a low value. For this purpose the use of transformer coupling is recommended. In no case, however, should the total dc grid-No.1-circuit resistance exceed 30,000 ohms when the 6146A is operated at maximum ratings. For operation at less than maximum ratings, the dc grid-No.1-circuit resistance may be as high as 100,000 ohms.

[j] Obtained preferably from a separate, well regulated source.

[k] Obtained from a fixed supply.

[m] Obtained preferably from a separate source modulated with the plate supply, or from the modulated plate supply through a series resistor.

[n] Obtained from grid-No.1 resistor or from a combination of grid-No.1 resistor with either fixed supply or cathode resistor.

[p] When grid No.1 is driven positive and the 6146A is operated at maximum ratings, the total dc grid-No.1-circuit resistance should not exceed the specified value of 30,000 ohms. If this value is insufficient to provide adequate bias, the additional required bias must be supplied by a cathode resistor or fixed supply. For operation at less than maximum ratings, the dc grid-No.1-circuit resistance may be as high as 100,000 ohms.

[q] Obtained preferably from separate source, or from the plate-supply voltage with a voltage divider, or through a series resistor. A series grid-No.2 resistor should be used only when the 6146A is used in a circuit which is not keyed. Grid-No.2 voltage must not exceed 400 volts under key-up conditions.

[r] Obtained from fixed supply, by grid-No.1 resistor, by cathode resistor, or by combination methods.

DEFINITIONS

AB_1 - The subscript 1 indicates that grid-No.1 current does not flow during any part of the input cycle.

AB_2 - The subscript 2 indicates that grid-No.1 current flows during some part of the input cycle.

CCS - Continuous Commercial Service.

ICAS - Intermittent Commercial and Amateur Service.

Ratings System - The *maximum ratings* in the tabulated data are established in accordance with the following definition of the *Absolute-Maximum Rating System* for rating electron devices.

Absolute-Maximum ratings are limiting values of operating and environmental conditions applicable to any electron device of a specified type as defined by its published data, and should not be exceeded under the worst probable conditions.

The device manufacturer chooses these values to provide acceptable serviceability of the device, taking no responsibility for equipment variations, environment variations, and effects of changes in operating conditions due to variations in device characteristics.

The equipment manufacturer should design so that initially and throughout life no absolute-maximum value for the intended service is exceeded with any device under the worst probable operating conditions with respect to supply-voltage variation, equipment component variation, equipment control adjustment, load variation, signal variation, environmental conditions, and variations in device characteristics.

Single-Tone Modulation - Single-Tone Modulation operation refers to that class of amplifier service in which the input consists of a monofrequency rf signal having constant amplitude. This signal is produced in a single-sideband suppressed-carrier system when a single audio frequency of constant amplitude is applied to the input of the system.

GENERAL CONSIDERATIONS

Temperature

The maximum bulb temperature of 220° C is a tube rating and is to be observed in the same manner as other ratings. The temperature may be measured with temperature-sensitive paint, such as Tempilaq. The latter is made by the Tempil Corporation, 132 W. 22nd Street, New York 11, N.Y.

To insure adequate cooling it is essential that free circulation of air be provided around the tube. In most cases, no additional air is required.

Plate Color

The plate shows no color when the 6146A is operated at full ratings under either CCS or ICAS conditions.

MECHANICAL CONSIDERATIONS

Plate Circuit

Heavy leads and conductors together with suitable insulation should be used in all parts of the rf plate tank circuit so that losses due to rf voltages and currents may be kept at a minimum. At the higher frequencies, it is essential that short, heavy leads be used for circuit connections in order to minimize lead inductance and losses.

Connections to the plate should be made with a flexible lead to prevent any strain on the seal at the cap.

ELECTRICAL CONSIDERATIONS

Plate and Grid No.2

When a new circuit is tried or when adjustments are made, it is advisable to reduce the plate voltage and grid-No.2 voltage. If the 6146A is operated at maximum ratings and grid-No.2 voltage is obtained through a series dropping resistor, the use of a 2500-ohm protective resistor in the high-voltage supply lead is recommended. When a separate grid-No.2 voltage supply is used, a 10,000-ohm protective resistor should be connected in the grid-No.2 supply lead.

The plate voltage should be applied before or simultaneously with the grid-No.2 voltage; otherwise, with voltage on grid No.2 only, its current may be large enough to cause excessive grid-No.2 dissipation. A dc milliammeter should be used in the grid-No.2 circuit so that its current may be measured and the dc power input determined.

The grid-No.2 current is a very sensitive indication of plate-circuit loading and grid-No.2 current rises excessively (often to the point of damaging the tube) when the amplifier is operated without load. Therefore, care should be taken when tuning a 6146A under no-load conditions in order to prevent exceeding the grid-No.2 input rating of the tube.

Driver

The driver stage for the 6146A in either class C telephony or telegraphy service should have considerably more output capability than the typical driving power shown in the tabulated data in order to permit considerable range of adjustment, and also to provide for losses in the grid-No.1 circuit and the coupling circuits. This recommendation is particularly important near the maximum-rated frequency where there are other losses of driving power, such as circuit losses, radiation losses, and transit-time losses.

Efficiency

Highest operating efficiency in high-frequency service, and therefore maximum power output, will be obtained when the 6146A is operated under load conditions such that the maximum rated plate current flows at the plate voltage which will give maximum rated input.

Class C Telephony

In plate-modulated class C amplifier service, the 6146A can be modulated 100 per cent. The grid-No. 2 voltage must be modulated simultaneously with the plate voltage so that the ratio of grid-No. 2 voltage to plate voltage remains constant. Modulation of the grid-No. 2 voltage can be accomplished either by connecting grid No. 2 through a separate winding on the modulation transformer to the fixed grid-No. 2 voltage supply, or by connecting grid No. 2 through an audio-frequency choke of suitable impedance for low audio frequencies to the fixed grid-No. 2 supply voltage. The supply end of the choke should be well bypassed to ground.

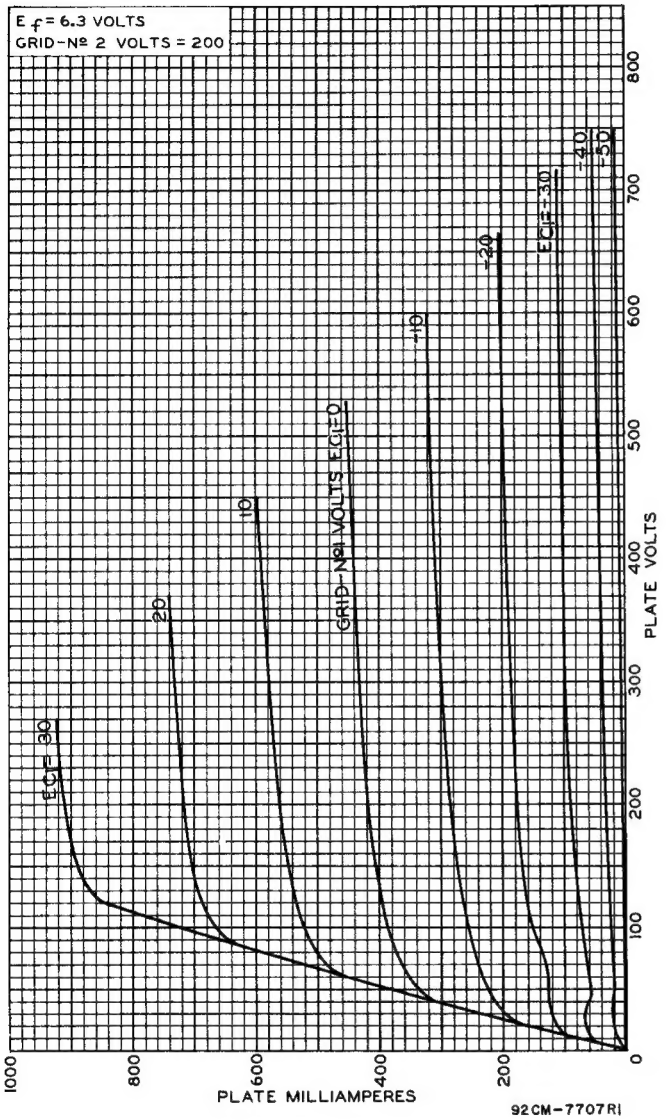

Fig. 1 - Typical Plate Characteristics of Type 6146A.

Circuit Arrangements

Push-pull or parallel circuit arrangements can be used when more radio-frequency power is required than can be obtained from a single 6146A. Two 6146A's in parallel or push-pull will give approximately twice the power output of one tube. The parallel connection requires no increase in exciting voltage necessary to drive a single tube.

With either connection, the driving power required is approximately twice that for a single tube. The push-pull arrangement has the advantage of simplifying the balancing of high-frequency circuits.

When two or more tubes are used in the circuit, precautions should be taken to insure that each tube draws the same plate current.

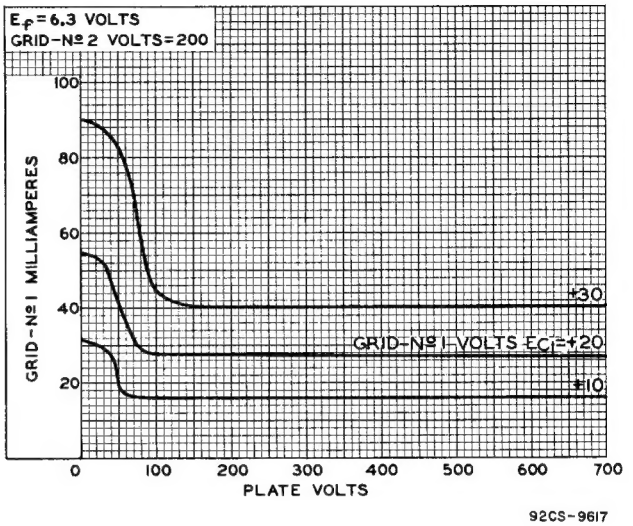

Fig. 2 - Typical Characteristics of Type 6146A.

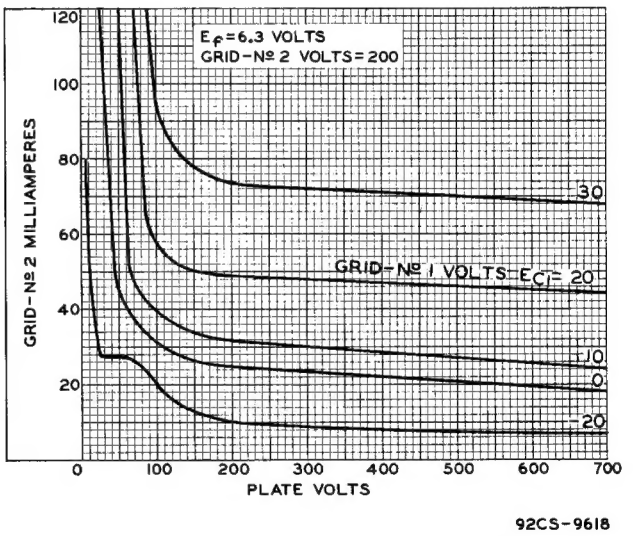

Fig. 3 - Typical Characteristics of Type 6146A.

Standby Operation

During standby periods in intermittent operation, the heater voltage may be maintained at normal operating value for most applications.

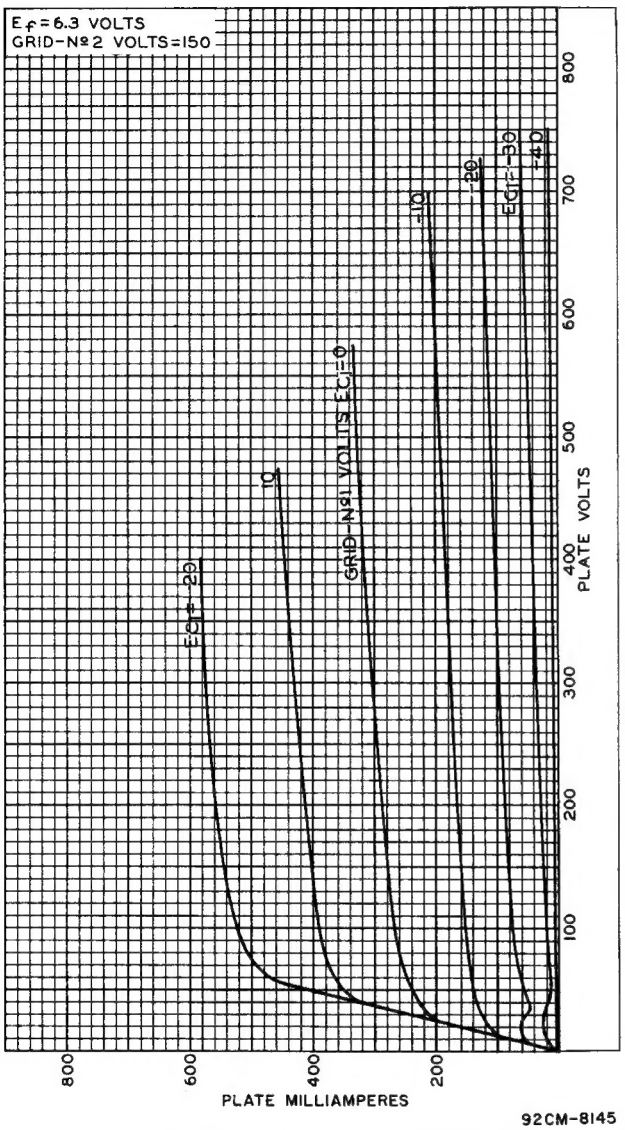

Fig.4 - Typical Plate Characteristics of Type 6146A.

In those applications which require maximum reliability, it is recommended that the heater voltage be maintained at normal operating value when the period is less than 15 minutes; that it be reduced to 80 per cent of normal when the period is between 15 minutes and 2 hours; and that for longer periods, the heater voltage should be turned off.

Protective Devices

Protective devices should be used to protect not only the plate but also grid No.2 against overload. In order to prevent excessive plate current flow and resultant overheating of the tube, the common ground lead of the plate circuit should be connected in series with the coil of an instantaneous overload relay. This relay should be adjusted to remove the dc plate

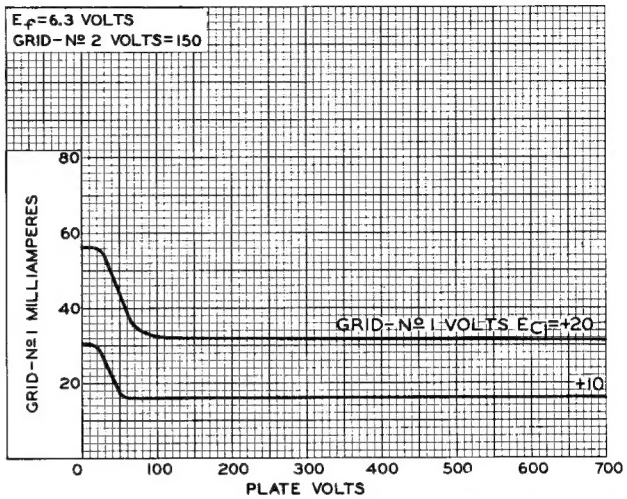

Fig.5 - Typical Characteristics of Type 6146A.

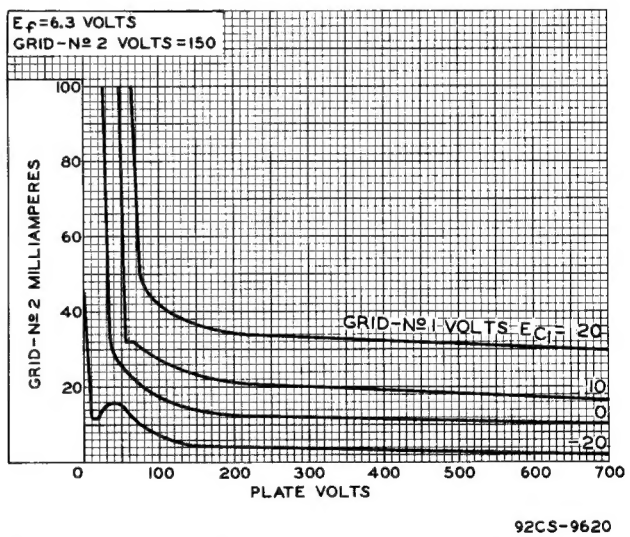

Fig.6 - Typical Characteristics of Type 6146A.

and grid-No. 2 voltage when the average value of plate current reaches a value slightly higher than normal plate current. A protective device in the grid-No. 2 supply should remove the grid-No. 2 voltage when the dc grid-No. 2 current reaches a value slightly higher than normal.

Precautions

The rated plate and grid-No. 2 voltages of this tube are extremely dangerous. Great care should be taken during the adjustment of circuits. The tube and its associated apparatus, especially all parts which may be at high potential above ground, should be housed in a

protective enclosure. The protective housing should be designed with interlocks so that personnel can not possibly come in contact with any high-potential point in the electrical system. The interlock devices should function to break the primary circuit of the high-voltage supplies when any gate or door on the protective housing is opened, and should prevent the closing of the primary circuit until the door is again locked.

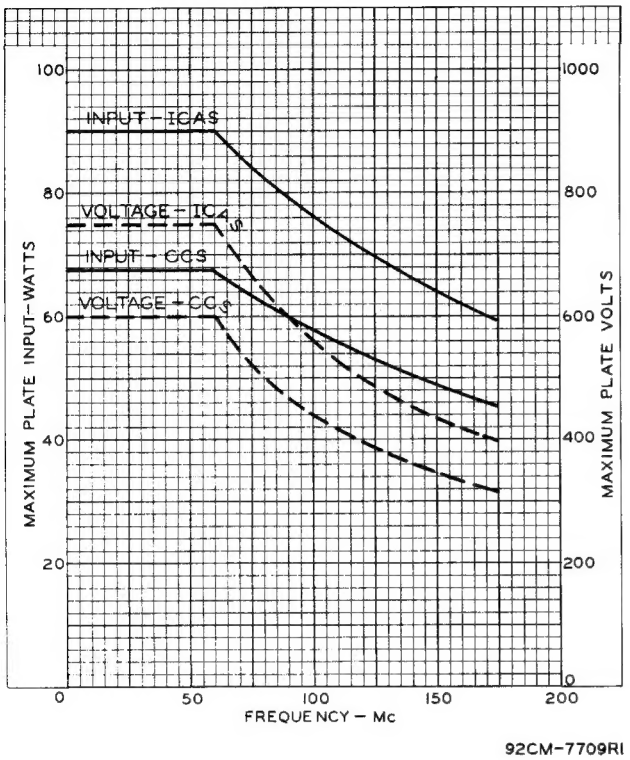

Fig. 7 - Curves Showing Plate Voltage and Plate Input vs Frequency for Type 6146A in Class C Telegraphy Service.

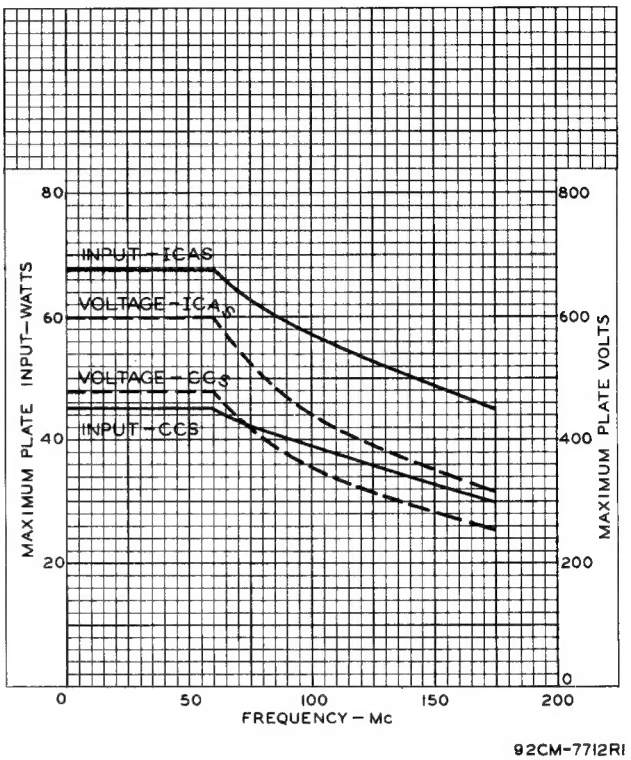

Fig. 8 - Curves Showing Plate Voltage and Plate Input vs Frequency for Type 6146A in Class C Telephony Service.

DIMENSIONAL OUTLINE

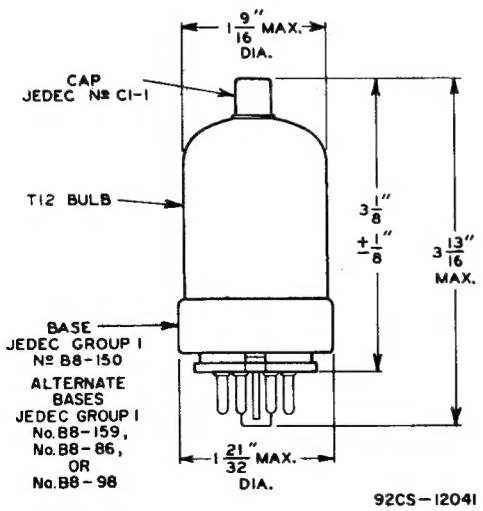

TERMINAL CONNECTIONS

Bottom View

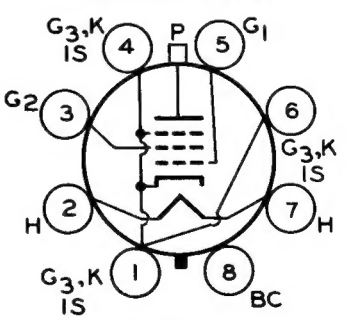

PIN 1: CATHODE, GRID NO.3, INTERNAL SHIELD
PIN 2: HEATER
PIN 3: GRID NO.2
PIN 4: SAME AS PIN 1
PIN 5: GRID NO.1
PIN 6: SAME AS PIN 1
PIN 7: HEATER
PIN 8: BASE SLEEVE
CAP: PLATE

Information furnished by RCA is believed to be accurate and reliable. However, no responsibility is assumed by RCA for its use; nor for any infringements of patents or other rights of third parties which may result from its use. No license is granted by implication or otherwise under any patent or patent rights of RCA.